Date: Tuesday, February 7, 2017
Time: 6:00 pm
Place: Westside Fire Station

LICENSE COMMITTEE

A. ROLL CALL

B. CORRECTION OF MINUTES

C. BUSINESS

1. APPLICATION FROM NORTHSIDE PUB & GRILL LLC FOR A "CLASS B" LIQUOR AND FERMENTED MALT BEVERAGE LICENSE

   Review and possibly recommend to Council for approval

Individual Requesting Item	City Clerk/DOGG
Expected Length of Discussion	5 min.

   Documents:

   License 020717.pdf
   Northside Pub Grill application.pdf

2. CONSIDERATION OF APPLICATION FOR PERMIT FOR POSSESSION OF LIVE CHICKENS AT 2724 3RD AVENUE FROM MICHAEL MANCINI & ERIN MANCINI

Individual Requesting Item	City Clerk/DOGG
Expected Length of Discussion	15 min.

   Documents:

   License 020717.pdf
   Mancini chicken permit.pdf
   Valley View covenant.pdf

3. DISCUSSION AND POSSIBLE ACTION REGARDING RECENT ISSUES WITH TEMPORARY ALCOHOL LICENSE ISSUED TO MONROE THEATRE GUILD AND FUTURE COURSE OF ACTION FOR SIMILAR TEMPORARY ALCOHOL LICENSES

Individual Requesting Item	Mayor Armstrong
Expected Length of Discussion	15 min.

D. BUSINESS BY MEMBERS

E. ADJOURNMENT

This Committee may take any action it considers appropriate related to any item on this agenda.

Request from persons with disabilities who need assistance to participate in this meeting, including need for an interpreter, materials in alternate formats, or other accommodations, should be made to the Office of the City Clerk at (608) 329-2564 with as much advance

notice as possible so that proper arrangements can be made.

Members: Chairperson Richard Thoman, Michael Boyce, Chris Beer, Alt. Tom Miller

License
Committee Staff Review

Agenda Item:
Application from Northside Pub & Grill LLC for a "Class B" Liquor and Fermented Malt Beverage License

Purpose:
To obtain a license to sell/serve fermented malt beverages and liquor

Review Notes from City Clerk/Director of General Government
Green County Smokeshack LLC is surrendering their "Class B" alcohol license back to the City contingent upon the City re-granting the License to Northside Pub & Grill LLC. Requirements have been met.

Staff Recommendation:
Recommend to Council for approval

ORIGINAL ALCOHOL BEVERAGE RETAIL LICENSE APPLICATION

Submit to municipal clerk.

For the license period beginning 2-8- 20 17
ending 6-30 20 17

TO THE GOVERNING BODY of the: ☐ Town of ☐ Village of ☑ City of } MONROE

County of GREEN Aldermanic Dist. No. _____ (if required by ordinance)

Applicant's WI Seller's Permit No.:	FEIN Number:
456-1027343788-03	45-1618040

LICENSE REQUESTED ▶	
TYPE	FEE
☐ Class A beer	$
☒ Class B beer	$ 41.67
☐ Class C wine	$
☐ Class A liquor	$
☐ Class A liquor (cider only)	$ N/A
☒ Class B liquor	$ 208.33
☐ Reserve Class B liquor	$
☐ Class B (wine only) winery	$
Publication fee	$ 19.23
TOTAL FEE	$ 269.23

paid 1-30-17

1. The named ☐ INDIVIDUAL ☐ PARTNERSHIP ☑ LIMITED LIABILITY COMPANY ☐ CORPORATION/NONPROFIT ORGANIZATION hereby makes application for the alcohol beverage license(s) checked above.
2. Name (individual/partners give last name, first, middle; corporations/limited liability companies give registered name): ▶ NORTHSIDE PUB & GRILL LLC

   An **"Auxiliary Questionnaire," Form AT-103, must be completed and attached to this application by each individual applicant, by each member of a partnership, and by each officer, director and agent of a corporation or nonprofit organization, and by each member/manager and agent of a limited liability company.** List the name, title, and place of residence of each person.

Title	Name	Home Address	Post Office & Zip Code
President/Member	MEMBER LAURA WINTERS W5077 ADVANCE RD MONROE WI 53566		
Vice President/Member	MEMBER JOEY WINTERS W5077 ADVANCE RD MONROE WI 53566		
Secretary/Member			
Treasurer/Member			
Agent ▶ Laura A. Winters			
Directors/Managers			

3. Trade Name ▶ NORTHSIDE PUB & GRILL Business Phone Number _____
4. Address of Premises ▶ 1609 10TH ST MONROE WI Post Office & Zip Code ▶ 53566
5. Is individual, partners or agent of corporation/limited liability company subject to completion of the responsible beverage server training course for this license period? ☑ Yes ☐ No
6. Is the applicant an employe or agent of, or acting on behalf of anyone except the named applicant? ☐ Yes ☑ No
7. Does any other alcohol beverage retail licensee or wholesale permittee have any interest in or control of this business? ☐ Yes ☑ No
8. (a) **Corporate/limited liability company applicants only:** Insert state WI and date 09/16/17 of registration.
   (b) Is applicant corporation/limited liability company a subsidiary of any other corporation or limited liability company? ☐ Yes ☑ No
   (c) Does the corporation, or any officer, director, stockholder or agent or limited liability company, or any member/manager or agent hold any interest in any other alcohol beverage license or permit in Wisconsin? ☐ Yes ☑ No

   (NOTE: All applicants explain fully on reverse side of this form every YES answer in sections 5, 6, 7 and 8 above.)
9. Premises description: Describe building or buildings where alcohol beverages are to be sold and stored. The applicant must include a complete floor plan (see attached) of all rooms including living quarters, if used, for the sales, service, consumption, and storage of alcohol beverages and records. Alcohol beverages may be sold and stored only on the premises described.) 1ST ~~AND~~ ~~LOWER LEVEL~~ of building located at 1609 10th St. excluding apartments
10. Legal description (omit if street address is given above): _____
11. (a) Was this premises licensed for the sale of liquor or beer during the past license year? ☑ Yes ☐ No
    (b) If yes, under what name was license issued? GREEN COUNTY SMOKESHACK LLC
12. Does the applicant understand they must file a Special Occupational Tax return (TTB form 5630.5d) before beginning business? [phone 1-800-937-8864] ☑ Yes ☐ No
13. Does the applicant understand they must hold a Wisconsin Seller's Permit? [phone (608) 266-2776] ☑ Yes ☐ No
14. Does the applicant understand that they must purchase alcohol beverages only from Wisconsin wholesalers, breweries and brewpubs? ☑ Yes ☐ No

READ CAREFULLY BEFORE SIGNING: Under penalty provided by law, the applicant states that each of the above questions has been truthfully answered to the best of the knowledge of the signers. Signers agree to operate this business according to law and that the rights and responsibilities conferred by the license(s), if granted, will not be assigned to another. (Individual applicants and each member of a partnership applicant must sign; corporate officer(s), members/managers of Limited Liability Companies must sign.) Any lack of access to any portion of a licensed premises during inspection will be deemed a refusal to permit inspection. Such refusal is a misdemeanor and grounds for revocation of this license.

SUBSCRIBED AND SWORN TO BEFORE ME

this 3rd day of JANUARY, 20 17

Carl J. Stern
(Clerk/Notary Public)

My commission expires _____

Laura A. Winters
(Officer of Corporation/Member/Manager of Limited Liability Company/Partner/Individual)

(Officer of Corporation/Member/Manager of Limited Liability Company/Partner)

(Additional Partner(s)/Member/Manager of Limited Liability Company if Any)

TO BE COMPLETED BY CLERK

Date received and filed with municipal clerk	Date reported to council/board	Date provisional license issued	Signature of Clerk / Deputy Clerk
1-4-17	2-7-17		Carl J. Stern
Date license granted	Date license issued	License number issued	

Premises description for Northside Pub & Grill LLC located at 1609 10th Street

1st floor, basement, and approx. 300 sq. ft. office on upper floor of building located at 1609 10th Street

Lana A. Winters

CITY OF MONROE
1110 18th Avenue, Monroe, WI 53566
Phone (608) 329-2530 FAX (608) 329-2561

Monroe Alcohol Beverages License Application Supplement

Name of Applicant/Partner/Corporation/LLC: NORTHSIDE PUB & GRILL

Address of licensed premise: 1609 10th St, Monroe WI 53566

Telephone number: (815) 275-3404 Anticipated opening date: 4/1/17

Mailing address: W5077 Advance Rd
Monroe WI 53566

What type of establishment is contemplated?

Liquor store_____ Grocery store_____ Convenience store - gas pumps_____

Restaurant X Bar X Sports Bar_____ Other (explain):_____

Describe the type of business you plan to operate if granted a license (attach additional sheets as necessary):

RESTAURANT & BAR

WISCONSIN

SELLER / SERVER CERTIFICATION

Trainee Name: Laura Winters

Date of Completion: 05/29/2015

School Name: 360training.com, Inc.

Certification # WI-22905

I,_____
certify that the above named person successfully completed an approved Learn2Serve Seller/Server course.

COMPLIES WITH WISCONSIN STATUTES 125.04, 125.17, 134.66

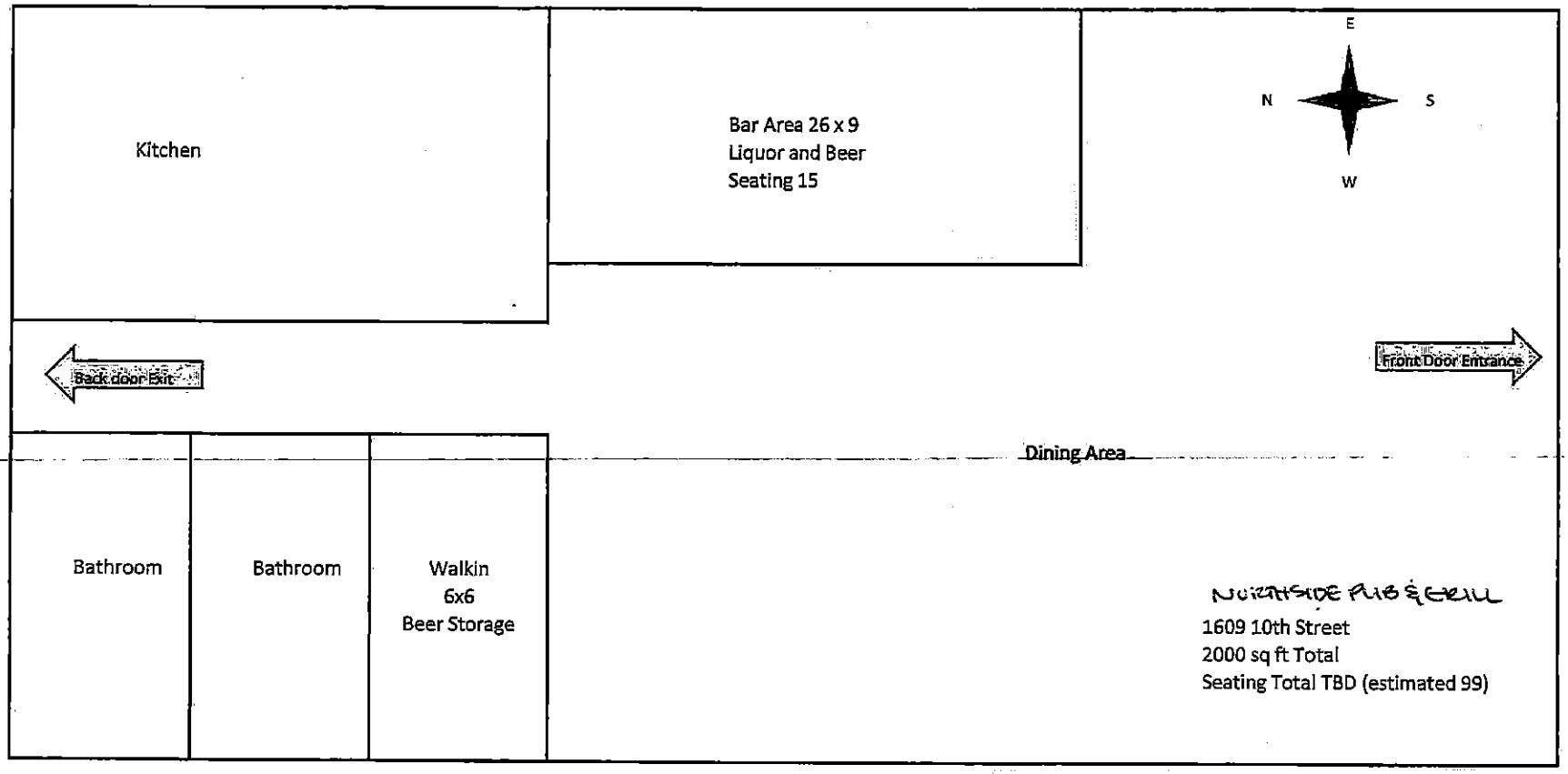
Kitchen
Bar Area 26 x 9
Liquor and Beer
Seating 15
E
N
S
W
Back door Exit
Front Door Entrance
Dining Area
Bathroom
Bathroom
Walkin
6x6
Beer Storage
NORTHSIDE PUB & GRILL
1609 10th Street
2000 sq ft Total
Seating Total TBD (estimated 99)

Date & Time of Receipt:
9/16/2016 2:44:06 PM

Order Number:
201609164969182

ARTICLES OF ORGANIZATION - Limited Liability Company(Ch. 183)

Filing Fee: $130.00
Total Fee: $130.00

ENDORSEMENT

State of Wisconsin
Department of Financial Institutions

EFFECTIVE DATE	
9/16/2016	

FILED 9/16/2016	Entity ID Number N046179

If applying for a Class B or C license, what type of food service will you have at this location? (check all that apply)

None_____ Prepackaged Foods_____ Snacks_____

Appetizers X Catered Events_____ Full Meals X

Hours of food service - from 11am to Close
(Attach additional sheets as necessary)

What percentage of your total sales will be from the sales of alcohol beverages? 20 %
Identify the registered agent for your Corporation or LLC. This is your Corporation's agent for service of process, notice or demand required or permitted by law to be served on the Corporation:

Name: Laura Winters Phone number: (815) 275-3404

Address: W5077 Advance Rd, Monroe WI 53566

Who will be conducting the day-to-day operations of the business?

Name: Laura Winters Phone number: (815) 275-3404

Address: W5077 Advance Rd, Monroe WI 53566

Does anyone else have money invested or any other interest in this business?

☐ Yes ☒ No

If yes, explain:_____

Have you made an agreement with anyone to repay any loan or any other payments based upon income from the business?

☐ Yes ☒ No

If yes, list their name and address:_____

_____

Private organizations (clubs): Do your membership policies contain any requirement of "Invidious" (likely to give offense) discrimination in regard to race, creed, color, or national origin?

☐ Yes ☒ No

Identify the owner of the building where the establishment is located:

Name: Joey & Laura Winters

Address: W5077 Advance Rd, Monroe WI 53566

Phone Number: (815) 275-3404 (c) (608) 325-5805 (H)

If you lease the building, answer the following questions:

Date lease begins: N/A Expires: N/A

Monthly rental: $ N/A

Do you have an option to renew the lease? ☐ Yes ☐ No

Does your lease allow for the assignment to another party without the consent of the owner?

☐ Yes ☒ No

For what length of time have you been guaranteed occupancy? (Number of years)

N/A

In addition to paying monthly rental, will you have to pay anything additional to the owner of the building to guarantee the performance of the lease?

☐ Yes ☒ No

If yes, explain:_____

Does the present owner or occupant object to the granting of your license?

☐ Yes ☒ No

If yes, explain:_____

Is there at least 300 feet between the building and any church, school, library or hospital?

☒ Yes ☐ No

Is this premises under construction?

☐ Yes ☒ No

If yes, provide estimated completion date:_____

Is this a franchise? ☐ Yes ☒ No

Is this premises currently licensed? ☒ Yes ☐ No

If yes, list type of license: CLASS B / FULL LIC.

Is the current licensee operating? ☐ Yes ☒ No

If no, provide the date closed: 9/30/2016

Legal capacity/occupancy of premises (for Class B and C applicants): 100
(Applicant should check with Fire Inspector if legal capacity is unknown)

Seating capacity of premises (for Class B and C applicants): 75

Are there any living quarters directly or indirectly accessible and under control of the applicant? (Please note that alcohol may be sold and stored only on the licensed premise, not in living quarters.)

☒ Yes ☐ No

Number of parking stalls on the premises: Ø

(Do not include street parking. If none on the premises, write "0")

Describe parking and how the parking lot is to be monitored: Public Parking streets on square, by owner

Who is responsible to keep the grounds clean?

Licensee_____ Building owner ✓ Hired maintenance_____

Employees ✓ Other:_____

What are your plans to keep the grounds clean of litter/garbage (check all that apply):

Sweep ✓ Pressure wash_____ Pick up litter ✓ Hired maintenance_____ Snow removal ✓

Building owner's responsibility_____ Garbage cans outside_____

Other:_____

How often?

Daily ✓ Weekly_____ Other:_____

How will noise issues be addressed? (Check all that apply)

Security ✓ Manager approaches customer(s) ✓ Call police ✓

Signs posted_____ Other:_____

Do you have any future plans for other businesses, licenses or permits at this location?

☒ Yes ☐ No

If yes, explain: SIDEWALK CAFE

How many employees will you have? Part-time 12-10 Full-time 1-3

Describe your management experience, staffing levels, duties and employee training:

20+ yrs management experience, staffing levels will fluquant due to need/season/weekday. Employees willl have safeserve bartending cert., safety & food safety training as well as operations training.

Are you offering any type of entertainment?

☒ Yes ☐ No

If yes, explain: TVs & Radio

Do you plan to allow dancing?

☐ Yes ☒ No

Do you plan to sell cigarettes?

☐ Yes ☒ No

Utilizing your market research, who would you project your target market to be? Locals

as well as stateline area residents.

Describe how you plan to advertise/promote your business. What products will you be

advertising? PRIMARY - FACEBOOK BUSINESS PAGE, DINNER SPECIALS, EVENTS (MAIN STREET)

Please explain anything else you feel we need to know about your business, including:

Uniqueness:

Décor:

Type of food offered and price range:

Other:

HOURS OF OPERATION FOR ALCOHOL BEVERAGE SALES/SERVICE ONLY					
Day of the week	Curent Hours of Operation (Does not apply to new applicants)		Proposed Hours of Operation (If same as current hours, write "same")		Number of customers expected each day
	Open	Close	Open	Close	
Sunday			11 am	Close	
Monday			11 am	Close	
Tuesday			— Closed —		
Wednesday			11 am	Close	
Thursday			11 am	Close	
Friday			11 am	Close	
Saturday			11 am	Close	

Provide a detailed written description of the building, including overall dimensions, seating arrangements, capacity, bar size and all areas where alcohol beverages are to be sold or stored. **The licensed premise described below shall not be expanded or changed without the approval of the Common Council.**

DETAILED FLOOR PLAN:

A detailed floor plan must be submitted with this application. Any application submitted without the detailed floor plan (including all required items as listed below) will be returned. Even if the premises has been previously licensed and a floor plan submitted, a new floor plan must be submitted with this application. The floor plan must be filed on 8½
X 11 inch sized paper. A separate sheet of paper must be filed for each floor where alcohol will be stored, displayed, sold, given away and/or consumed. Even if the basement is being used for alcohol storage only, a floor plan is still required for the basement. Handwritten plans are acceptable. Plans do not need to be architectural drawings and need not be to scale.

The floor plan must include all of the following items:

□ Dimensions of the premises
□ Total square feet of the premises (length x width = square feet)
□ Label all entrances and exits
□ Label all alcohol storage areas (coolers, etc)
□ Provide dimensions of all alcohol storage areas (length x width)
□ Label all alcohol display areas (behind the bar, shelves, etc.)
□ Provide dimensions of all alcohol display areas (length x width)
□ Class B & C Applicants Only: Label all seating areas, bars, and food preparation areas
(kitchen)
□ Class B & C Applicants Only: Label all outdoor areas used for the sale or service of
alcohol beverages (for example, patios, beer gardens, sidewalk cafes)
□ Class B & C Applicants Only: Provide dimensions of all outdoor areas used for the sale or
service of alcohol beverages (length x width)
□ Label all parking areas on the premises (do not include street parking). This is required
even if the parking is shared, for example, in a strip mall.
□ Provide dimensions of all parking areas available on the premises (length x width). The

parking area(s) should be marked on the floor plan for the first floor showing the

relation to the building.

□ Mark the North direction (N ↑) on each page

□ Write the date on each page

□ Write the legal entity name (and agent's name if a corporation or LLC) on each page

□ Write the trade (business) name on each page

□ Write the premises address on each page

For outdoor serving areas, a Beer Garden Application must also be completed.

Read carefully before signing: Under penalty provided by law, the applicant states that the above information has been truthfully completed to the best of the knowledge of the signer. Signer agrees to operate this business according to law and that the rights and responsibilities conferred by the license(s), if granted will not be assigned to another. Any lack of access to any portion of a licensed premise during inspection will be deemed a refusal to permit inspection. Such refusal is a misdemeanor and grounds for revocation of this license.

Officer of Corporation/Member of LLC/Partner/Individual

Officer of Corporation/Member of LLC/Partner/Individual

Subscribed and Sworn to before me

this 30th day of April, 2017

Clerk/Notary Public

My commission expires_____

Submit this completed form and all related materials to:

City Clerk, 1110 18th Avenue, Monroe, WI 53566 4/23/09

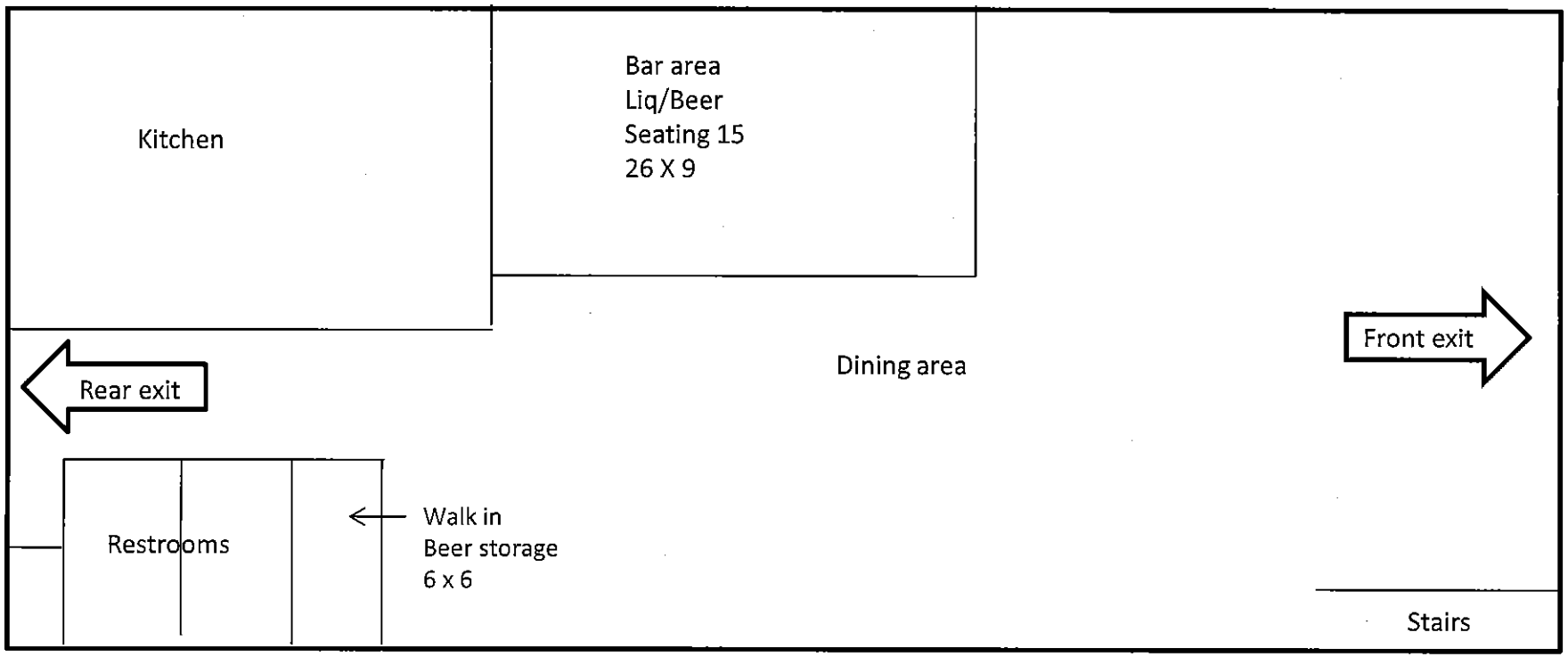

Northside Pub & Grill
1609 10th St.
Main level
2000 sq ft

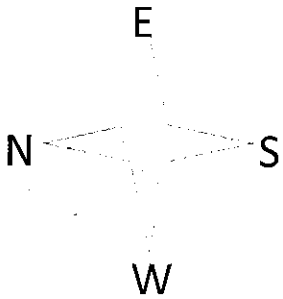

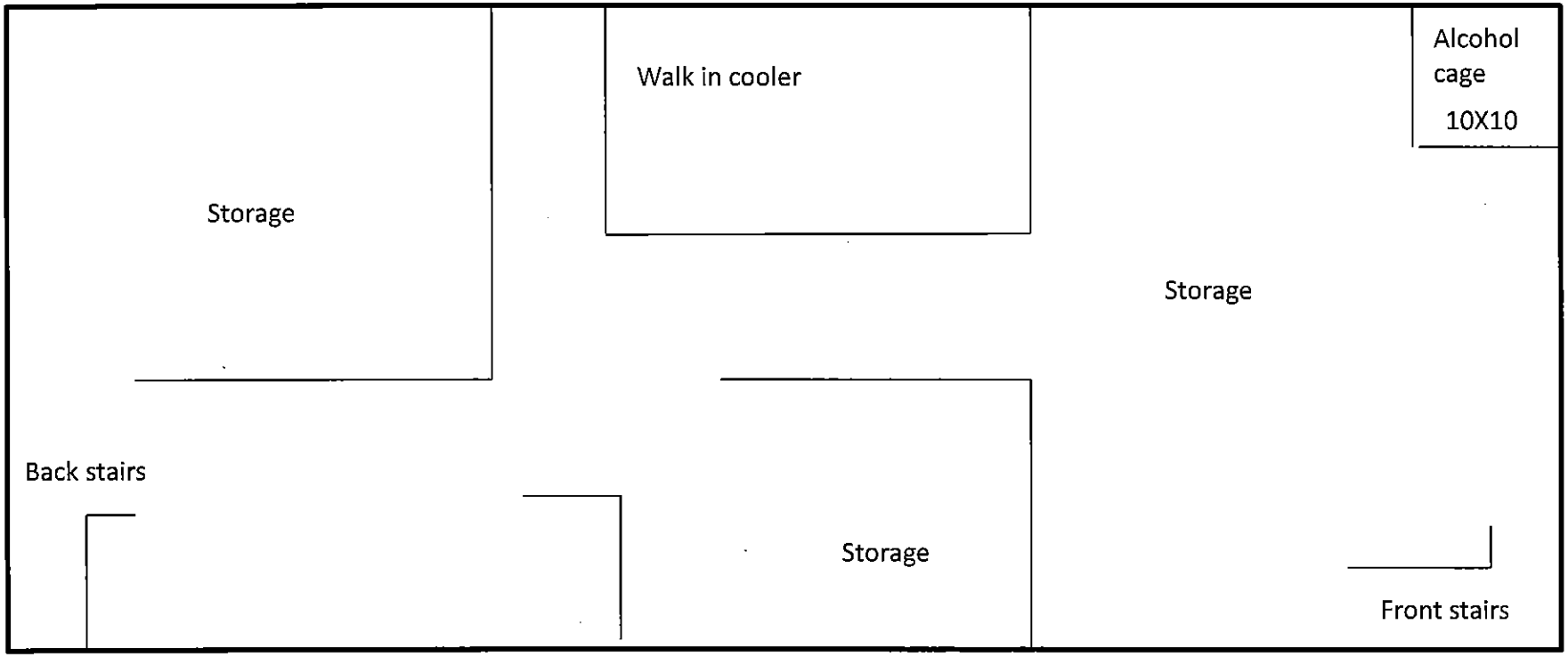

Northside Pub & Grill
1609 10th St.
Basement (lower level)
2000 sq ft

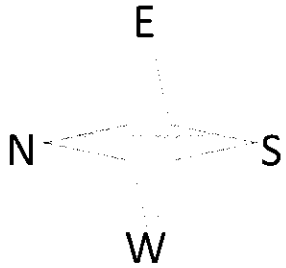

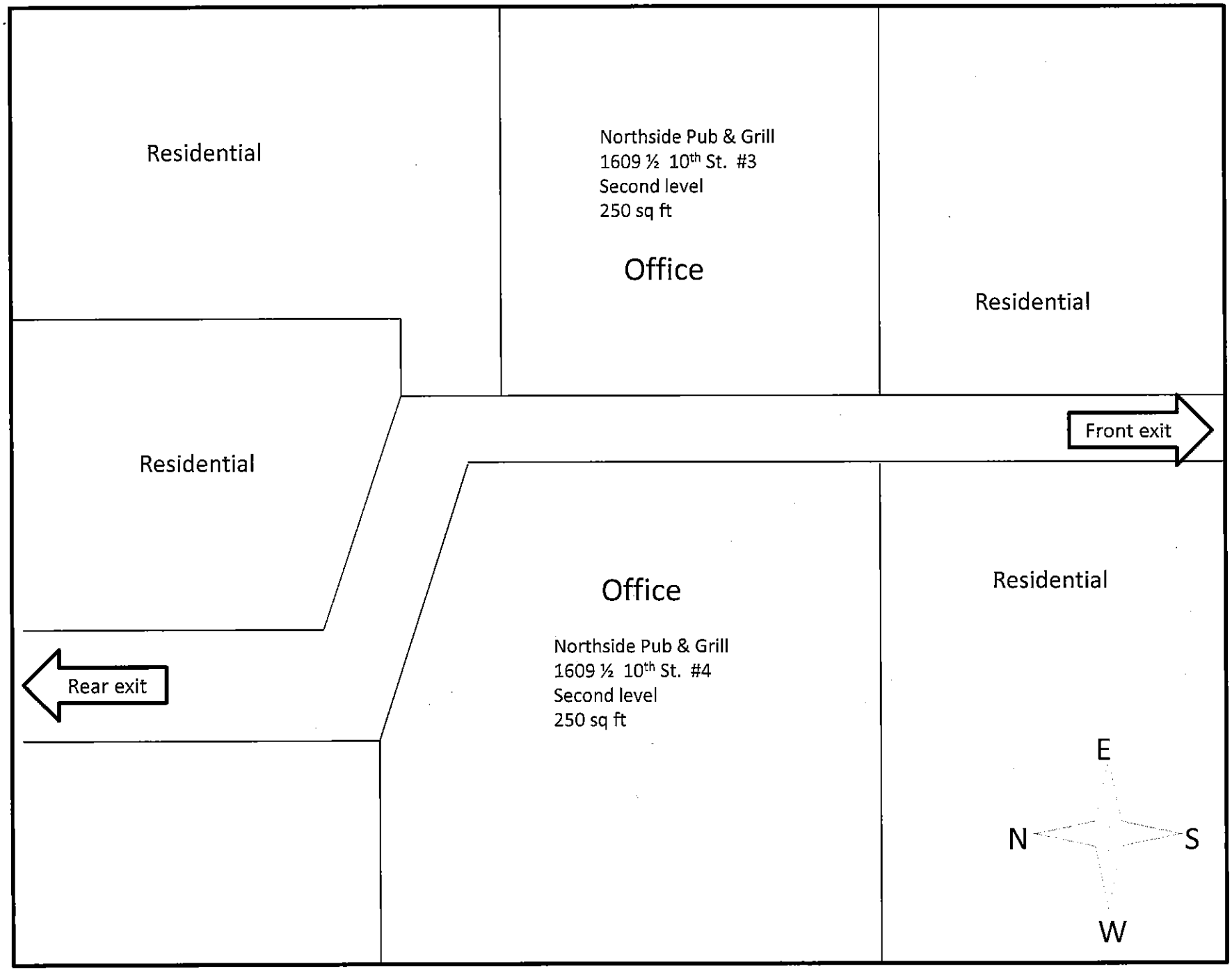
Residential
Northside Pub & Grill
1609 ½ 10th St. #3
Second level
250 sq ft
Office
Residential
Front exit
Residential
Office
Northside Pub & Grill
1609 ½ 10th St. #4
Second level
250 sq ft
Residential
Rear exit
E
N
S
W

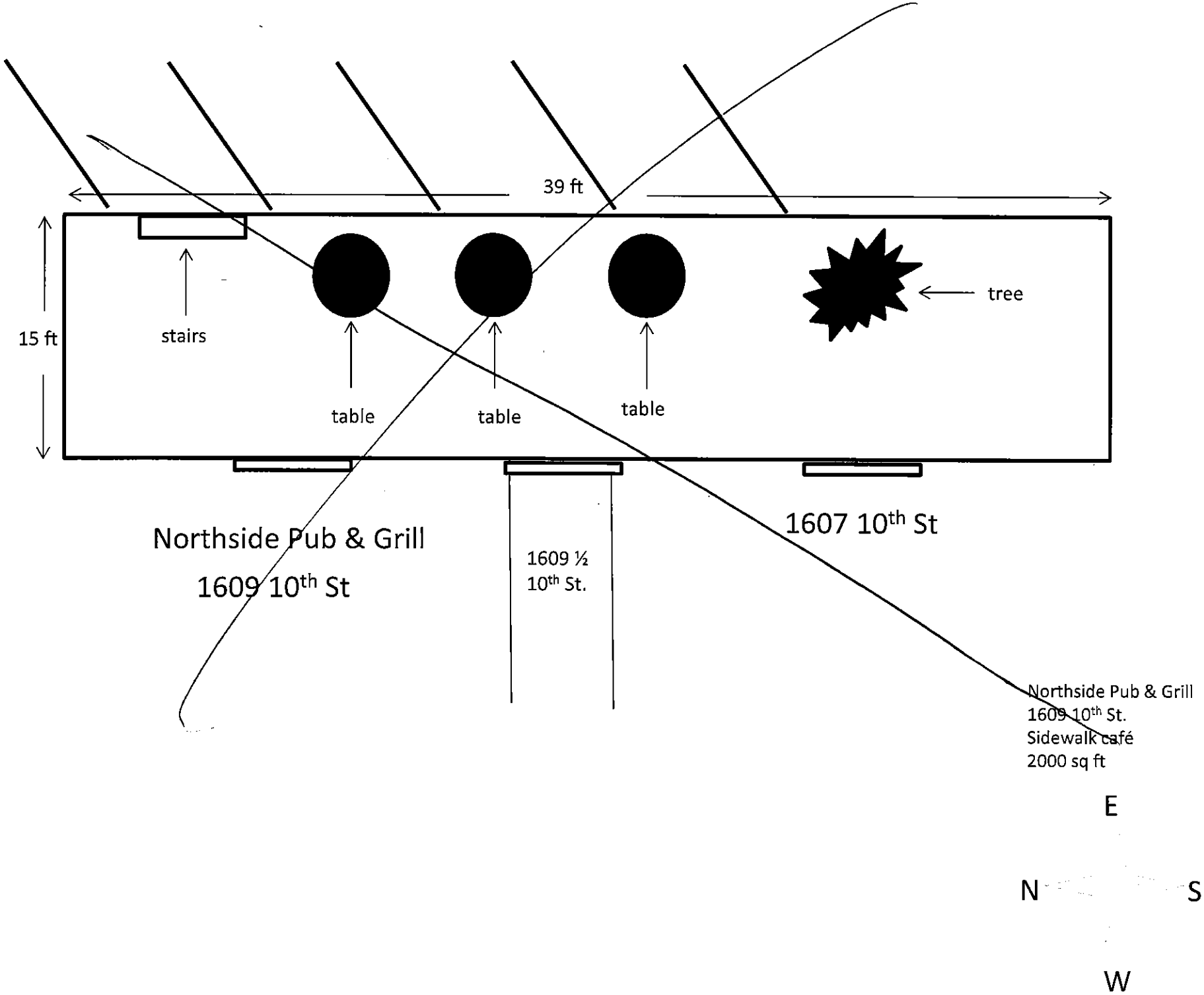
39 ft
15 ft
stairs
table
table
table
tree
Northside Pub & Grill
1609 10th St
1609 ½
10th St.
1607 10th St
Northside Pub & Grill
1609 10th St.
Sidewalk café
2000 sq ft
E
N
S
W

License
Committee Staff Review

Agenda Item:
Application for permit for possession of live chickens at 2724 3rd Avenue from Michael Mancini & Erin Mancini

Purpose:
To possess live chickens in the City of Monroe

Review Notes from City Clerk/Director of General Government
There are neighborhood covenants and deed restrictions on this property. Mr. Mancini was made aware of this, but still wanted to proceed with his application.

Staff Recommendation:
No recommendation

CITY OF MONROE
1110 18th Avenue, Monroe, WI 53566
Phone (608) 329-2524 FAX (608) 329-2561

Application for Permit for Possession of Live Chickens

The undersigned most respectfully makes application for a permit under section 9-2-22 of the Monroe City Code to possess live chickens subject to all applicable conditions, regulations, and provisions of all state statutes and city ordinances & resolutions regarding issuance of said permit.

Applicant(s): Michael Mancini & Erin Mancini

Phone number: 920 791 9267

Address: 2724 3rd Ave Monroe WI 53566
(Street) (City) (State) (ZIP)

Email address: MIKEMNCINI@GMAIL.COM

Number of live chickens to be possessed 4

Permit Address: 2724 3rd Ave Monroe WI 53566
(Street) (City) (State) (ZIP)

Owner of property for which permit is requested Erin & Mike Mancini

Phone number: 920 791 9267

Address: 2724 3rd Ave Monroe WI 53566
(Street) (City) (State) (ZIP)

Email address: MIKEMNCINI@GMAIL.COM

Description of Coop and Run (Including size and proposed construction materials)
Coop will be built out of 2x4s in an A Frame style construction with the floor of the coop being raised off the ground and will be ~~100~~" square. The full coop and run will measure ~~4ft wide x 8ft long.~~ There will be one nest box

96" 8ft wide x 10ft long

Description cont. 96"
measuring an additional ~~100"~~ square.

Some properties may have deed restrictions and/or neighborhood covenants in effect that prohibit the possession of live chickens on the subject property. Have you checked to see if any such restrictions or covenants are in effect at the permit address? X Yes ____ No

NOTE: This is a permit application only for the possession of live chickens. No slaughtering is allowed.

Date of Application: 12/30/2016

Applicant Signature: Michael Mancini

****

The following must be submitted with the application:

- X Accurately scaled drawing showing the location of the proposed coop and any chicken run, distances to lot lines and distances to nearest adjoining principal structure, together with dimensions of the coop and chicken run
- X Satisfactory evidence that the applicant has registered the proposed location with the Wisconsin Department of Agricultural Trade and Consumer Protection pursuant to section 95.51 of the Wisconsin Statutes and section ATCP 17 of the Wisconsin Administrative Code
- _ Permit fees as follows:
  $50.00 - Initial Review Fee paid 1-4-17
  $25.00 - Review Fee for changes to construction or size of coop or run or location on premises
  $25.00 – Annual Permit Fee
- X Property Owner's Notarized Signature (required only if the applicant is not the owner of the property for which permit is requested)

****

OWNER'S CERTIFICATION (if required)

I certify that I am the owner of the property located at _____and I hereby approve the use of this property for the possession of live chickens in accordance with Monroe City Code Section 9-2-22

Owner Signature:_____

State of Wisconsin

County of Green

This instrument was signed before me on _____
by _____

Notary Signature _____

My commission expires on _____ (seal)

ERIN AND MIKE MANCINI ARE THE OWNERS OF
2724 3RD AVE MONROE WI 53566

This section to be completed by the City of Monroe

Date Paid: _____Total Amount Paid: __ _____ (Acct# 5/533)

City Clerk checklist

- X Complete application
- X Scale drawing included
- _ Fee collected
- X Owner's signature and notary signature
- _ Covenants or restrictions verified by applicant
- X Wisconsin Dept. of Ag registration

Building Inspector checklist Rewrite Description of Coop and run

- ok Coop Construction materials acceptable (resistant to rodents, wild birds and predators)
- ok Coop provides a humane environment (adequate ventilation, sun, shade and protection from adverse weather) ~~More shade and more protection from weather needed~~
- ok Coop interior enclosed area of not less than 4 square feet per chicken and a total enclosed area of not more than 24 square feet ~~Coop is under sized need floor with 16 sq ft~~ in design
- ok Run does not exceed in size the greater of 40 square feet or 1% of the rear yard area, but in no case more than 100 square feet
- ok Run to be constructed in workmanlike fashion of wire normally used for the containment of chickens
- ok One family dwelling
- ok Rear yard only
- ok Coop or run is not located within 10 feet of any lot line unless the rear or side lot is contiguous to an alley in which case the coop or run shall not be within 3 feet of the lot line abutting such alley
- ok No portion of coop or run located within 25 feet of any principal structure on adjacent lot

Approved by City Clerk: _____ Date: _____

Approved by Building Inspector: _____ Date: _____

Approved by License Committee: _____ Date: _____

Approved by Common Council: _____ Date: _____

_____Disapproved (reason):

_____

_____

_____

_____Special Conditions of Approval:

_____

_____

_____

FOR PLACEMENT OF COOP ONLY 1" = 10 ft
FOR COOP 1/4" = 1 ft

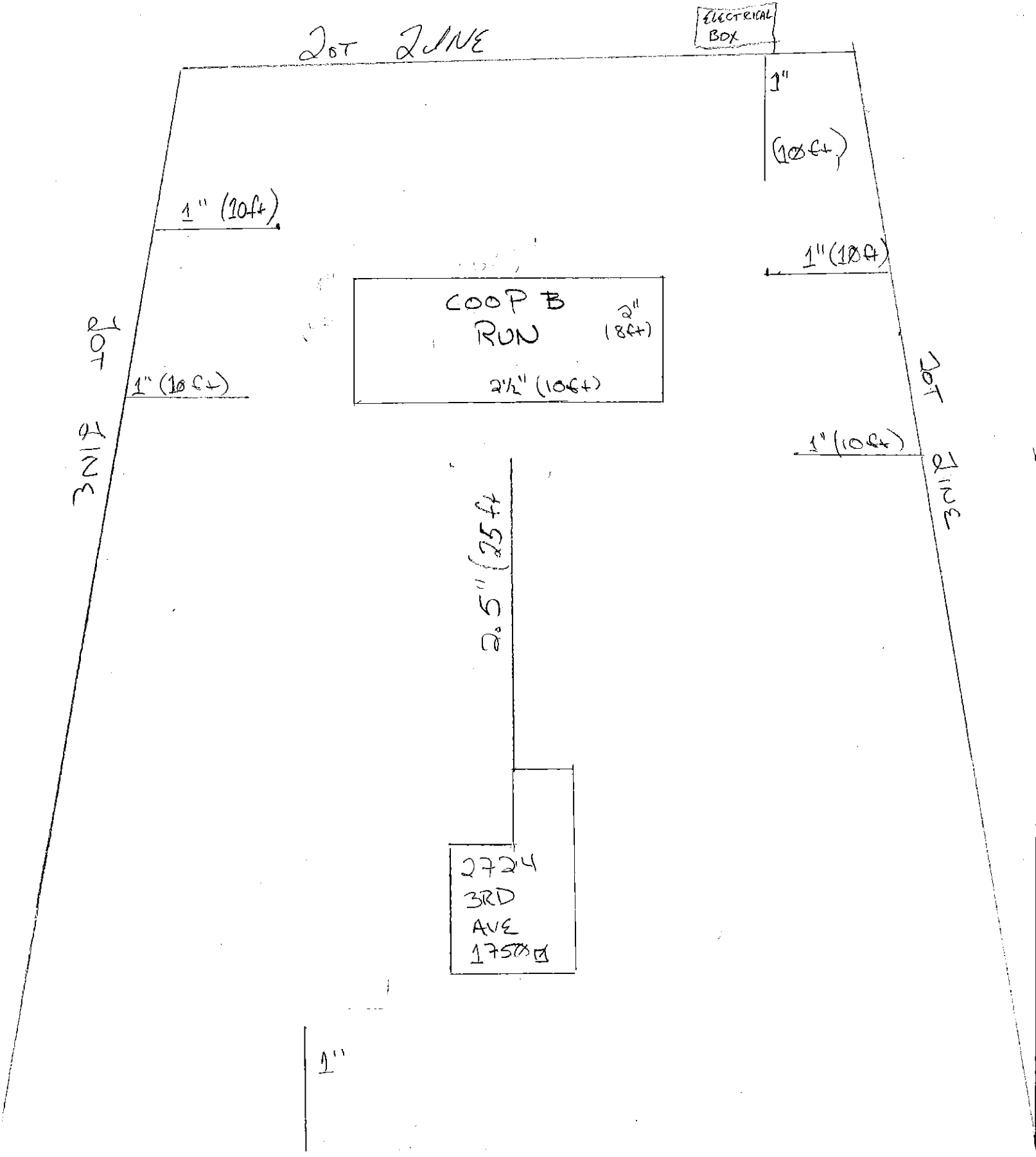

Coop Construction

VIEW - FRONT 1/2" = 1 ft

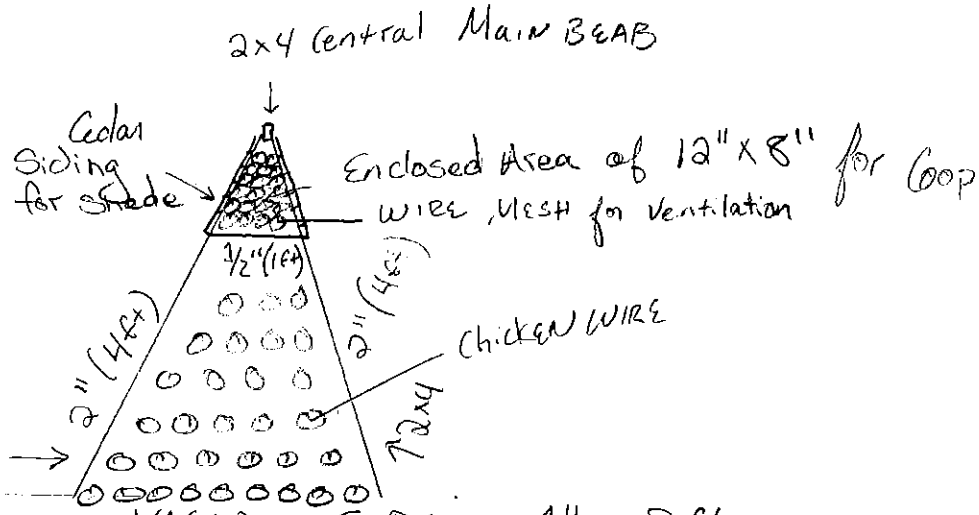

VIEW - SIDE 1" = 2 ft

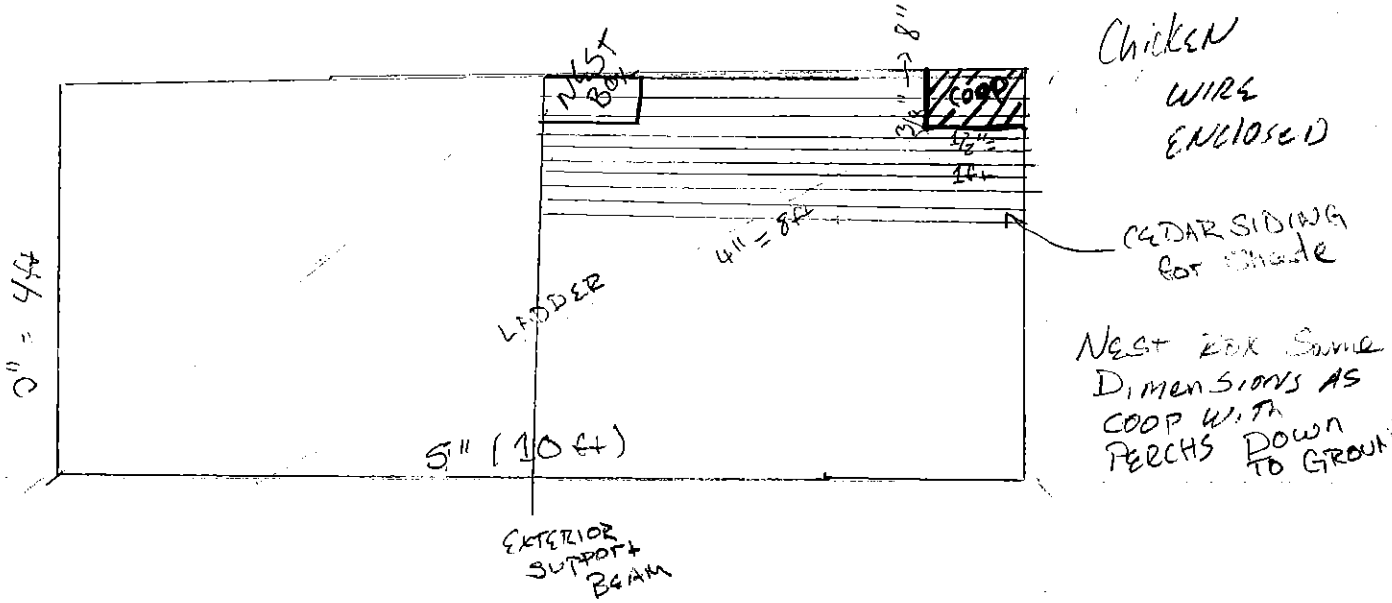

Wisconsin Livestock Premises Registration Card

Below is your Premises registration card. Please printout this sheet and cut-out the card below.

Wisconsin Livestock Premises Registration Card

Michael C Mancini
2724 3RD AVE
MONROE, WI, 53566-3505

Livestock Premises Code: 00N43H7

First issue date: 01/17/2017
Expiration date: 07/31/2019

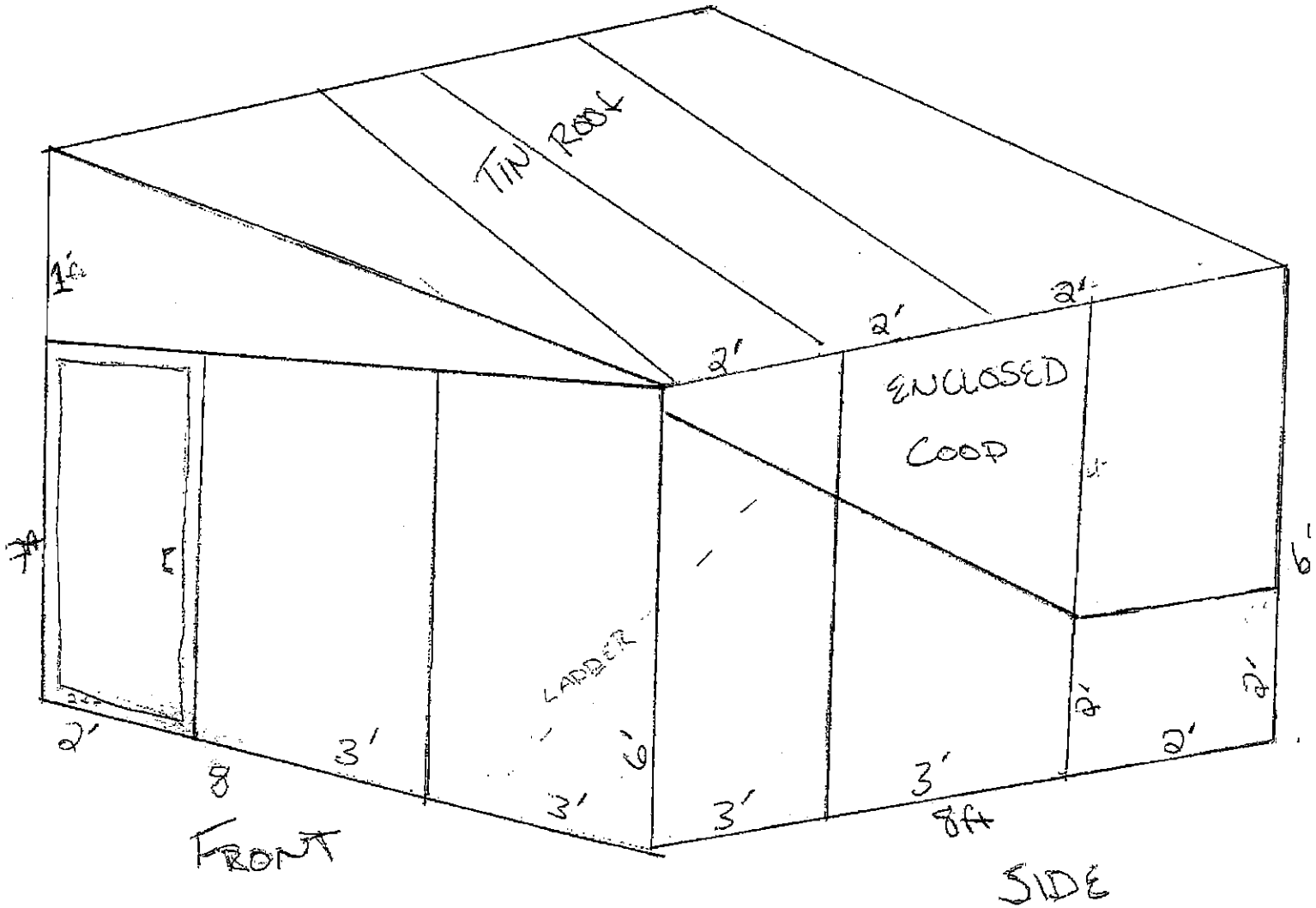

1" = 2ft

Coop Details →

FROM LOT LINES 1" = 10ft
FROM HOUSE 1" = 10ft

COOP & RUN 1/2" = 8ft

N

PARCEL 3730

10ft

10ft

10ft

8ft

8ft

8ft

2724
3RD AVE

PW 1
1-16-17

3RD AVE

Page 1-of-1

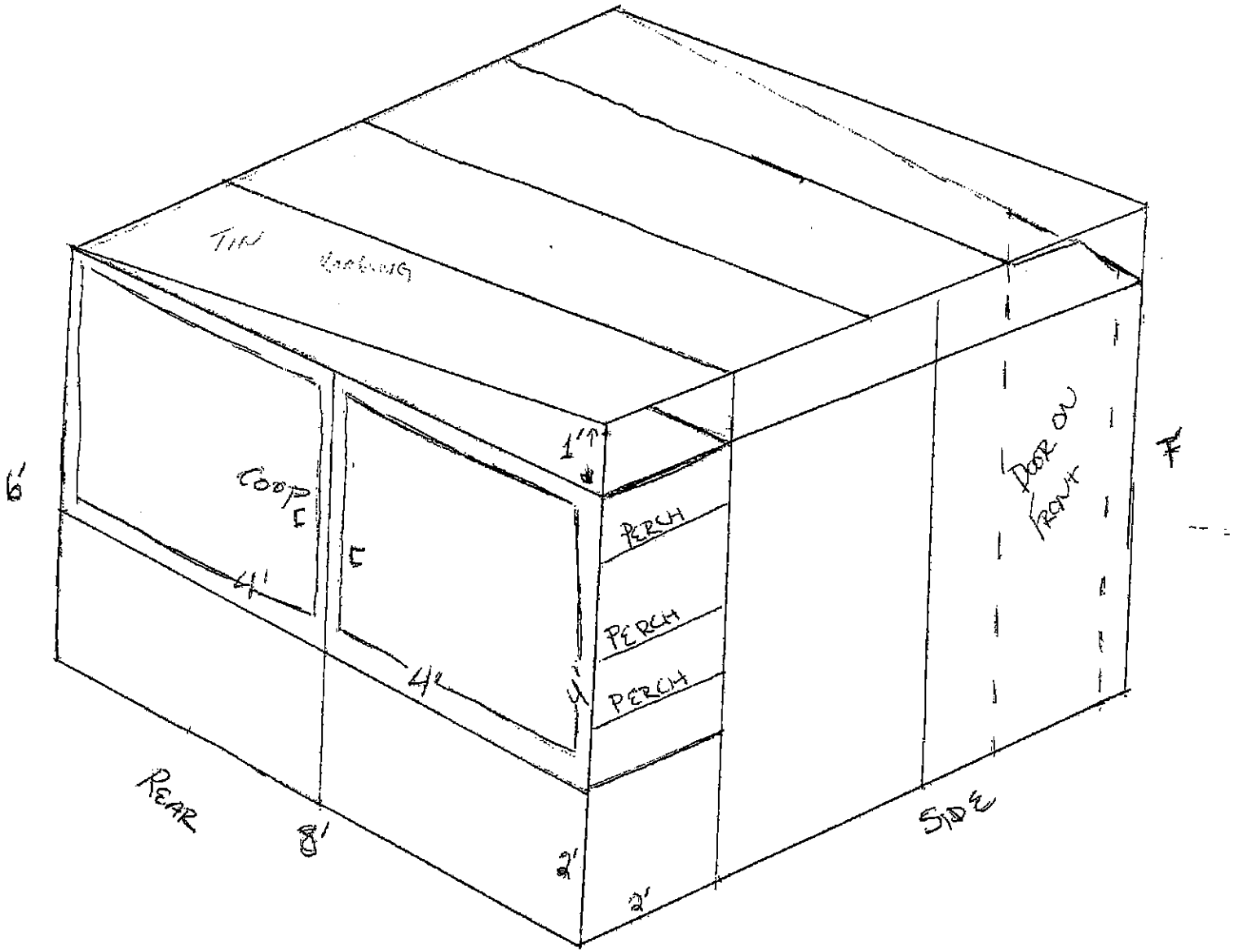

Coop fully enclosed by wooden doors w/ 1ft Vent
RUN Enclosed W/ Chicken WIRE

2" = 2ft

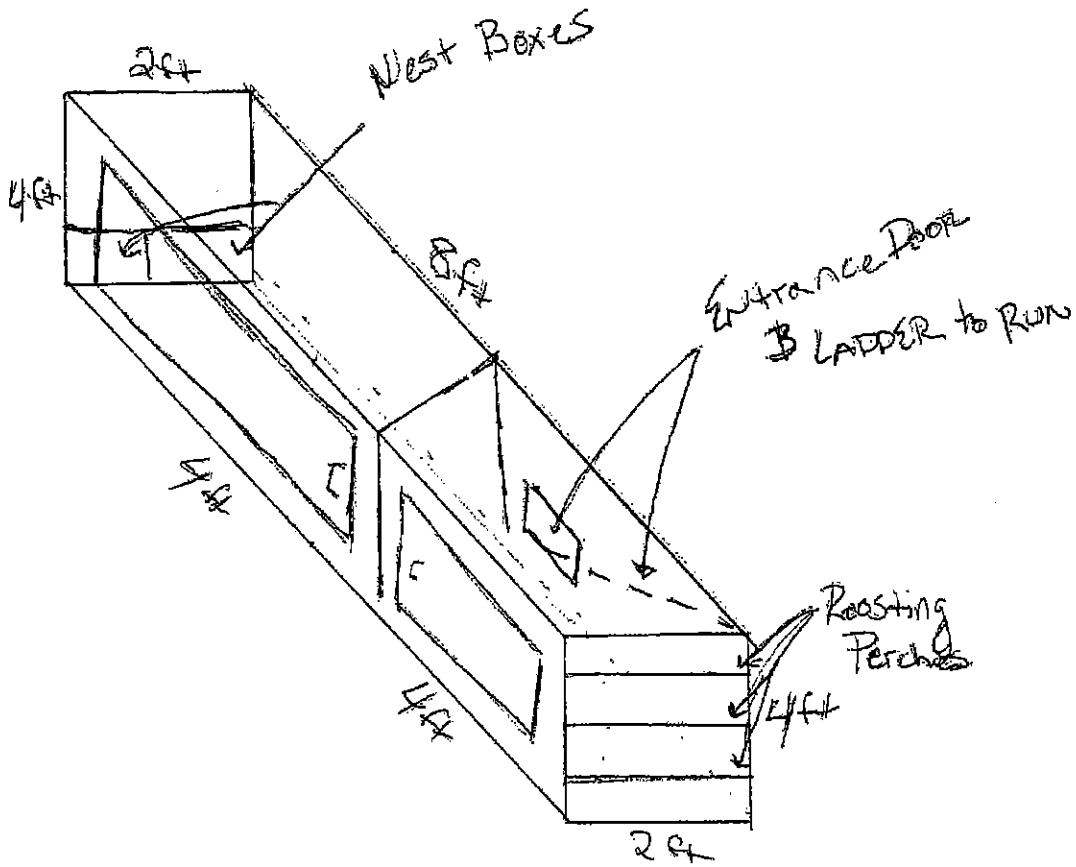

* Coop will be fully enclosed & Covered

1" = 2 ft

Carol Stamm

From: Carol Stamm
Sent: Friday, January 20, 2017 10:04 AM
To: 'Michael Mancini'
Subject: RE: Registration Card

This will be presented to the License Committee on February 7. There are a lot of concerns because of the covenants and deed restrictions and I do not know what the outcome will be.

Carol J. Stamm
City Clerk/Director of General Government City of Monroe
1110 18th Ave.
Monroe, WI 53566
population - 10,717
phone: (608) 329-2530

-----Original Message-----
From: Michael Mancini [mailto:mikemncini@gmail.com]
Sent: Friday, January 20, 2017 9:55 AM
To: Carol Stamm <cstamm@cityofmonroe.org>
Subject: Re: Registration Card

Good morning Carol, revised description of coop

The run will be constructed with 2x4s and chicken wire -- fully enclosed and shaded with tin roofing. The coop will be constructed of the same plywood walls and removable 2x4 perches. All doors will be latched on the exterior. The foundation will be four 8' 4x4s with full chicken wire enclosure beneath a gravel and sand "floor"

Sent from my iPhone

> On Jan 19, 2017, at 11:25 AM, Carol Stamm <cstamm@cityofmonroe.org> wrote:
>
> It would not do any harm.
>
> Carol J. Stamm
> City Clerk/Director of General Government City of Monroe
> 1110 18th Ave.
> Monroe, WI 53566
> population - 10,717
> phone: (608) 329-2530
>

Declaration of Valley View
Addition Number One in the City of Monroe

RESTRICTIONS AND COVENANTS

To protect and preserve the values in Valley View Addition Number One in the City of Monroe, Green County, Wisconsin, for the mutual benefit and protection of all owners, it is agreed that said Valley View Addition Number One shall be subject to the following protective covenants, easements, and servitudes which are to run with the land and shall be binding on all parties hereto:

TERMS:

These covenants are to run with the land and shall be binding on all parties and all persons claiming under them for a period of thirty years, after which time said covenants shall be automatically extended for successive periods of ten years unless an instrument signed by a majority of the then owners of the lots has been recorded, agreeing to change said covenants in whole or in part. The said lot or lots, herein above-described, shall not at any time, be subdivided, nor sold except as a whole, but this restriction shall not prevent the purchasers from conveying any part of the said real estate hereby conveyed to the owner or owners of said lots adjoining the land herein conveyed.

ENFORCEMENT:

Enforcement shall be by proceeding at law or in equity against any person or persons violating or attempting to violate any covenant either to restrain violation or to recover damages.

SEVERABILITY:

Invalidation of any one of these covenants by judgment or court order shall in no way affect any of the other provisions which shall remain in full force and effect. All of the restrictions herein contained are severable and divisible, and any restriction which is found to be unenforceable, invalid, illegal, or unconstitutional shall not affect any of the other restrictions herein.

LAND USE AND BUILDING TYPE:

All lots except lots 1,2 and 3 of Block 4, shall be used for single-family and duplex residential dwelling purposes and no store, shop, tavern, old people's home, church, school, professional services or other business or enterprise shall be conducted or erected thereon.

Lots 1,2, and 3 of Block 4 shall be restricted to uses only as are permitted under B-1 Business District Zoning of the Monroe City Code.

No single-family dwelling shall be erected, altered, placed or permitted to remain on any lot other than a

dwelling not to exceed two and one-half (2 1/2) stories in height and a basement or attached garage for not more than three (3) cars. No detached garages shall be permitted.

DWELLING SIZE:

The ground floor area of any single-family dwelling, exclusive of one-story open porches and attached garages, shall not be less than 1,100 square feet for a one-story dwelling or less than 700 feet for a dwelling of more than one story, provided, however, that any single-family dwelling which has a basement garage, the first floor area above the basement walls shall not be less than 1,400 square feet. All single-family and duplex dwellings must have at least a two-car garage.

ARCHITECTURAL CONTROL:

No outbuilding or detached structure of any kind shall be erected, placed or altered on any lot in Blocks 1, 3, and 5 until the construction plans and specifications and a plan showing the location of the structure have been approved by the Architectural Control Committee as to quality of workmanship and materials, harmony of external design with existing structures, and as to location with respect to topography and finish grade elevation and any such outbuilding or detached structure approved shall not exceed a height of six (6) feet, a width of eight (8) feet and a length of ten (10) feet.

No dwelling, building, or structure shall be erected, placed or altered on any lot until the construction plans and specifications and a plan showing the location of the structure have been approved by the Architectural Control Committee as to quality of workmanship and materials, harmony of exterior design with existing structures in the subdivision and as to location with respect to topography and finish grade elevation.

No fence, hedge or wall shall be erected, placed or altered on any lot nearer to any street than the minimum building setback unless approved by said committee.

All oil and gas tanks shall be buried or placed in the cellar.

BUILDING LOCATION:

No building shall be located on any lot except in conformity with said plat and all applicable state, county and other municipal rules, regulations and ordinances pertaining thereto.

EASEMENTS:

Easements for installation and maintenance of utilities are reserved as shown on the recorded plat. Within these easements, no structures, planting, or other material shall be placed or permitted to remain which may damage or interfere with the installation and maintenance of utilities. The easement area of each lot and all improvements in it shall be maintained continuously by the owner of the lot, except for those improvements for which a public authority or utility company is responsible.

NUISANCES:

No noxious or offensive activity shall be carried on upon any lot, nor shall anything be done thereon which may be or may become an annoyance or nuisance to the neighborhood.

TEMPORARY STRUCTURES:

No structure of a temporary character, trailer, basement, tent, shack, garage, barn, or other outbuilding shall be used on any lot at any time as a residence either temporarily or permanently. Any residence constructed upon any lot shall be completed within one (1) year after the commencement of construction thereof.

SIGNS:

No sign of any kind shall be displayed to the public view on any lot in Blocks 1,3, and 5 except one sign of not more than five (5) square feet advertising the property for sale or rent, or signs used by a builder to advertise the property during the construction and sales period.

LIVESTOCK AND POULTRY:

No animals, livestock or poultry or any kind shall be raised, bred or kept on any lot, except that dogs, cats or other household pets may be kept provided that they are not kept, bred or maintained for any commercial purpose.

GARBAGE AND REFUSE DISPOSAL:

No lot shall be used or maintained as a dumping ground for rubbish. Trash, garbage, or other waste shall not be kept except in sanitary containers. All outside incinerators or other equipment for the storage or disposal of such material shall be kept in a clean sanitary condition. All refuse of any description shall be confined to the rear of the house and no garbage shall be burned on the premises in such incinerators or otherwise.

MEMBERSHIP:

The Architectural Control Committee is composed of Werner E. Zimmerman, Jr. and Marlene Zimmerman, Monroe, Wisconsin. The committee may designate a representative

to act for it. In the event of death or resignation of any member of the committee, the remaining member shall have full authority to designate a successor. Neither the members of the committee nor its designated representative shall be entitled to any compensation for services performed pursuant to this covenant. At any time, the then record owners of a majority of the lots shall have the power through a duly recorded written instrument to change the membership of the committee or to withdraw from the committee or restore to it any of its powers and duties.

The restrictions and covenants herein contained are applicable to the property encompassed in the plat of Valley View Addition Number One recorded with the Register of Deeds for Green County, Wisconsin, on October 19, 1977 at 2:55 P.M., in Volume 6 of Plats, Page 14, Document Number 263949.

IN WITNESS WHEREOF, the owner, Werner E. Zimmerman, Jr., has hereunto set his hand and seal this 13th day of June, 1978.

Werner E. Zimmerman, Jr. (SEAL)
Werner E. Zimmerman, Jr.

STATE OF WISCONSIN)
) ss.
COUNTY OF GREEN)

Personally came before me this 13th day of June, 1978, the above-named Werner E. Zimmerman, Jr., to me known to be the person who executed the foregoing instrument and acknowledged the same.

(SIGNED ON ORGINAL COPY)

John K. Callahan
Notary Public, Green County, Wisconsin
My Commission is permanent.

This instrument drafted by:

JOHN K. CALLAHAN
Attorney at Law
Monroe, Wisconsin 53566

JKC/jz